LONG SEAMS

COURSE	ORIENTATION
1(TOP)	10°
2	15°
3	10°

*VERT – TOP TO BOTTOM

Ship loose items:
NONE

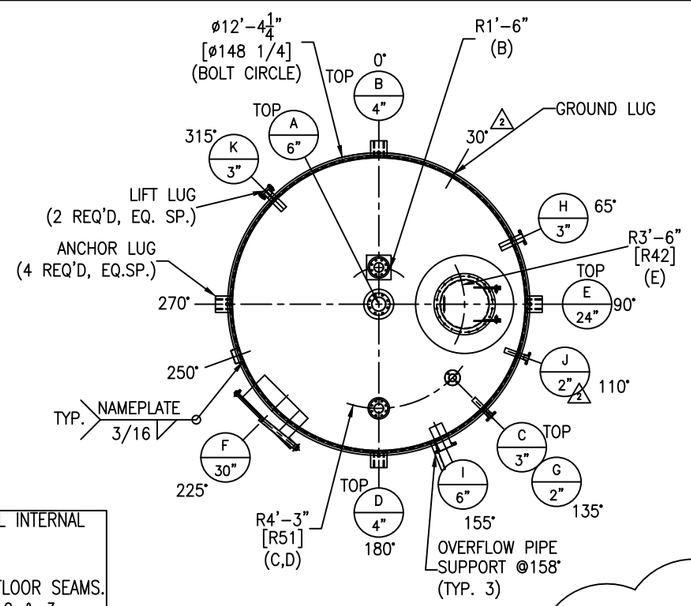

NOTE 7: MT TEST REQUIRED FOR ALL INTERNAL WELDS BELOW LIQUID LEVEL.

NOTE 8: X-RAY: 100% RT ON ALL FLOOR SEAMS. 100% RT ON LONG SEAM OF SHELL 2 & 3. SPOT RT ON LONG SEAM OF SHELL 1. SPOT RT ON ALL T-JOINTS.

NOTE: ALL SHELL NOZZLES TO HAVE VISORS SEE FIG 7A & 7B FOR DETAIL.

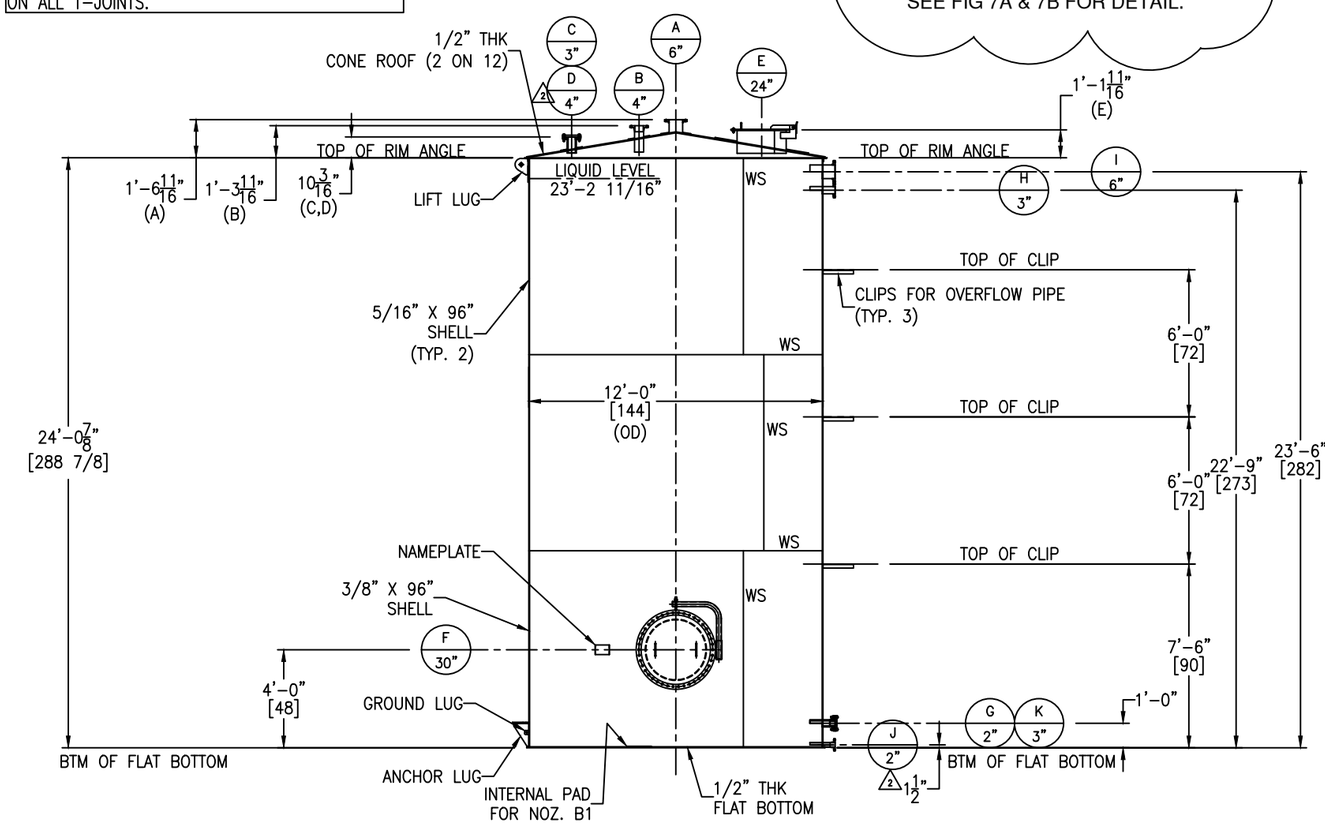

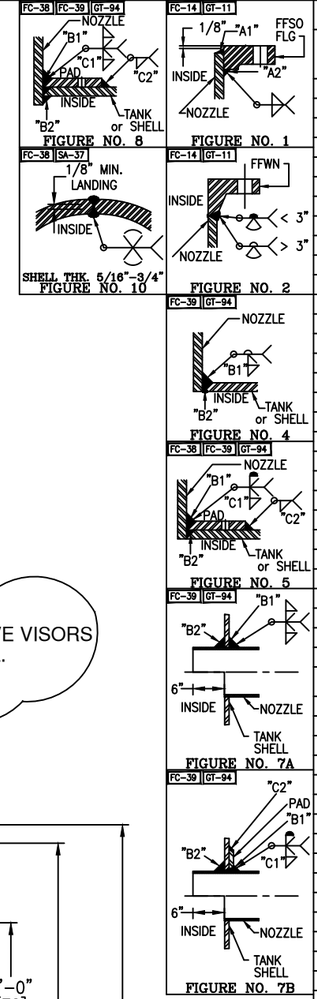

NOZZLE SCHEDULE

MARK	SERVICE	SIZE	RATING	TYPE / STYLE	NECK SCHED.	PROJECTION EXT. (℄)	PROJECTION INT. (MIN.)	WELD FIGURE	REPAD SIZE (WIDTH X THK.)	WELD SIZE "A1"	"A2"	"B1"	"B2"	"C1"	"C2"
A	VENT	6"	150#	FFSO	40S	SEE DWG	–	1,5	4" X 5/16"	1/4	1/4	1/4	1/8	5/16	5/16
B	INLET	4"	150#	FFWN	80S	SEE DWG	6"	1,8	3" X 5/16"	1/4	1/4	1/4	1/4	5/16	5/16
C	LT	3"	150#	FFSO	40S	SEE DWG	1"	1,8	2" X 5/16"	3/16	3/16	1/4	1/8	5/16	5/16
D	SPARE	4"	150#	FFSO W/ FFBLIND	40S	SEE DWG	1"	1,8	3" X 5/16"	1/4	1/4	1/4	1/8	5/16	5/16
E	ROOF MAWNAY	24"	–	API W/HINGE	1/4"	SEE DWG	1"	8	11" X 1/2"	–	–	1/4	1/8	1/2	1/4
F	SHELL MANWAY	30"	–	API W/DAVIT	5/16"	8"	6" TOP 180°	7B	2" X 1/4"	–	–	5/16	1/8	1/4	1/4
G	OUTLET	2"	150#	FFWN	80S	6"	6" TOP 180°	1,7A	–	3/16	3/16	1/4	1/8	–	–
H	HIGH HIGH NOZZLE	3"	150#	FFSO	40S	6"	6" TOP 180°	1,7A	–	3/16	3/16	1/4	1/4	–	–
I	OVERFLOW	6"	150#	FFSO	40S	6"	6" TOP 180°	1,7A	–	1/4	1/4	1/4	1/4	–	–
J	DRAIN	2"	150#	FFWN	80S	6"	6" TOP 180°	1,7A	–	1/4	1/4	3/8	1/2	–	–
K	SPARE	3"	150#	FFWN W/ FFBLIND	80S	6"	6" TOP 180°	1,7a	–	3/16	3/16	1/4	1/8	–	–

MATERIALS OF CONSTRUCTION

	VESSEL
SHELL	SA36
HEADS	SA36
RIM ANGLE	SA36
NOZZLE NECKS	SA312-304/304L WLD
NOZZLE FLANGES	SA182F-304/304L
MANWAY NECKS	SA240-304/304L
MANWAY FLANGES	SA240-304/304L
GASKETS	1/2 VITON
BOLTS/STUDS	SA193-B7 (ZINC PLATED)
NUTS	SA194-2H (ZINC PLATED)
REPADS	SA36
COUPLINGS	–
SUPPORTS/HOLD DOWNS	SA36
LIFTING LUGS	SA36
CLIPS	SA36
INSULATION RINGS	–
GROUND LUG	SA36
BAFFLE	–
LADDER	–
TANK CLIPS (LADDER)	–
HANDRAIL	–
HANDRAIL CLIPS	–
PLATFORM	–
PLATFORM CLIPS	–
DIPTUBE SUPPORT	–
JACKET SHELL	–
JACKET HEADS	–
JACKET NOZZLE NECKS	–
JACKET NOZZLE FLANGES	–

DESIGN DATA

	VESSEL
DESIGN AND FAB. CODE	API650 (SUPP. BY NACE SP0294)
CERT. STAMP REQ'D.	NO
DESIGN PRESSURE	10 inH20/ -10 inH20
DESIGN TEMPERATURE	120° F
MIN. DESIGN METAL TEMP.	0° F @ 10 inH20
OPERATING PRESSURE	–
OPERATING TEMPERATURE	–
JOINT EFFICIENCY HEADS	0.70
JOINT EFFICIENCY SHELL	0.70
CORROSION ALLOWANCE	1/4" (SHELL, ROOF & FLAT BTM ONLY)
SPECIFIC GRAVITY	1.83
EARTHQUAKE ZONE	Ss = (0.320) S1 = (0.093)
WIND LOAD	102 MPH
STRESS RELIEF	NOT REQ'D
RADIOGRAPHIC EXAM	SEE NOTE 8
DYE PENETRANT EXAM	NOT REQ'D
MAGNETIC PARTICLE EXAM	SEE NOTE 7
HYDROSTATIC TEST	NOT REQ'D
PNEUMATIC TEST	2 PSIG/ GAUGE #1
JKT DESIGN AND FAB. CODE	–
JKT CERT. STAMP REQ'D.	–
JKT DESIGN PRESSURE	–
JKT DESIGN TEMPERATURE	–
JKT MIN. DESIGN METAL TEMP.	–
JKT OPERATING PRESSURE	–
JKT OPERATING TEMPERATURE	–
JKT JOINT EFFICIENCY HEADS	–
JKT JOINT EFFICIENCY SHELL	–
JKT HYDRO TEST	–

VESSEL FINISH

INTERIOR WELD TREATMENT:	SAV TANK STANDARD
EXTERIOR WELD TREATMENT:	SAV TANK STANDARD
SAV TANK FINISHING STANDARD:	N/A
INSULATION:	N/A
PAINTING:	SEE NOTE 6
GALVANIZING:	N/A

VESSEL CAPACITY AND WEIGHTS

OPERATING CAPACITY	–
FULL CAPACITY	20,400 GAL.
EMPTY SHIPPING WEIGHT	19,100 LBS.
WEIGHT FULL OF WATER	189,400 LBS.
WEIGHT FULL OF PRODUCT	330,800 LBS.

QUALITY CONTROL

ENG. _____ DATE: _____

Q.C. _____ DATE: _____

This drawing is issued for customer approval. please review, make approval changes (if any) in red. check the appropriate box, sign & date.

- ☐ Approval – no changes. Please proceed with fabrication.
- ☐ Approved as noted. Please proceed with fabrication
- ☐ Not approved. Please make changes and resubmit.

Customer signature _____ Date _____

GENERAL NOTES

1.) COVER ALL FLANGES, OPENINGS & MACHINED SURFACES PRIOR TO SHIPMENT UNLESS OTHERWISE NOTED.
2.) BOLT HOLES TO STRADDLE 0° & 180° UNLESS OTHERWISE NOTED.
3.) NOZZLE REPADS TO HAVE (1) ø1/4" TELL-TALE HOLES ON HORIZONTAL CENTER LINE. ALL OTHER REPADS TO HAVE (1) ø1/4" WEEP HOLE AT LOWEST POINT ON PAD.
4.) MANUFACTURING TOLERANCE TO BE IN ACCORDANCE WITH API STANDARD 650 7.5.
5.) ASME MATERIALS TO CONFORM TO THE FOLLOWING: FLANGES – B16.5, FITTINGS – B16.9 & COUPLINGS – B16.11.
6.) PAINTING – EXTERIOR TO BE SANDBLAST & PAINTED (1) COAT EPOXY PRIMER & (1) COAT EPOXY TOP COAT @ 3-4 MILS DFT EACH (WHITE COLOR).
7.) MT TEST REQUIRED FOR ALL INTERNAL WELDS BELOW LIQUID LEVEL.
8.) X-RAY: 100% RT ON ALL FLOOR SEAMS. 100% RT ON LONG SEAM OF SHELL 2 & 3. SPOT RT ON LONG SEAM OF SHELL 1. SPOT RT ON ALL T-JOINTS.

REVISIONS

REV	D.BY	C.BY	DATE	DESCRIPTION
				AS BUILT
2	RS	AD	8/14/25	CERTIFIED
1	RS	NP	7/25/25	APPROVAL REV 1
0	AD	RS	7/8/25	APPROVAL

Savannah Tank & Equipment Corp.
1517 Telfair Road, Savannah, GA 31415
(912) 233-8902

DRAWN BY: AD
CHK'D BY: RS
APPROVED BY: NP
SCALE: 1/4" = 1'-0"

KEMIRA WATER SOLUTIONS INC.
SULFURIC ACID TANK
EQUIP. #
CUST. PO #4503358554

DRAWING NO.: 075-25-1 SHT 1 OF 4 REV. SET 2

FC-38

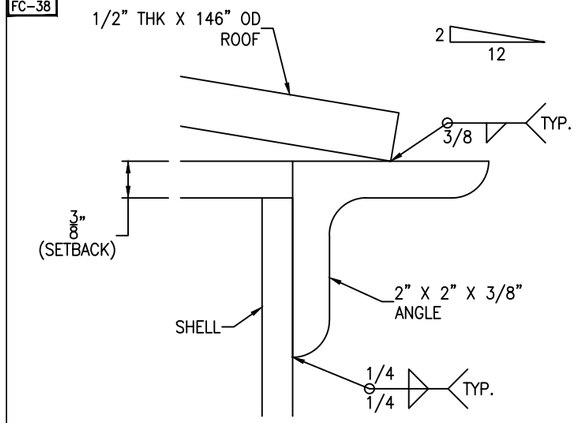

RIM ANGLE DETAIL

SCALE: 1'-0" = 1'-0"

FC-38

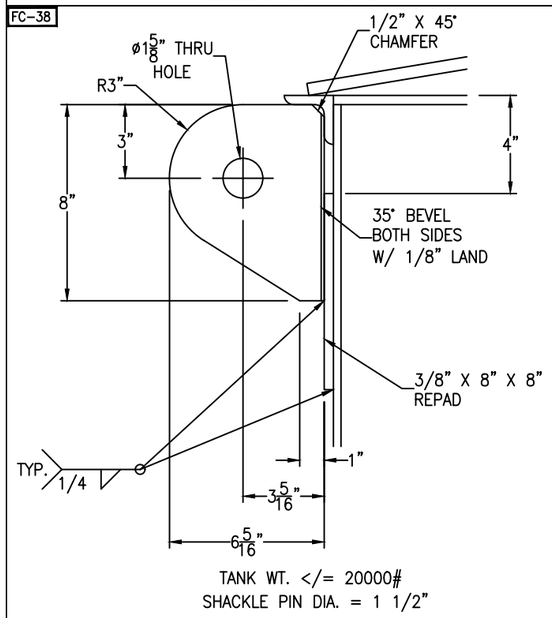

TANK WT. </= 20000#
SHACKLE PIN DIA. = 1 1/2"

LIFT LUG DETAIL

(2 REQ'D) SCALE: 3" = 1'-0"

FC-38

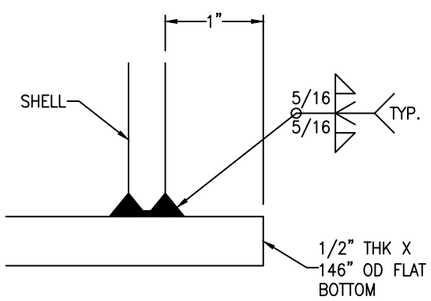

FLAT BOTTOM DETAIL

SCALE: 1'-0" = 1'-0"

FC-38

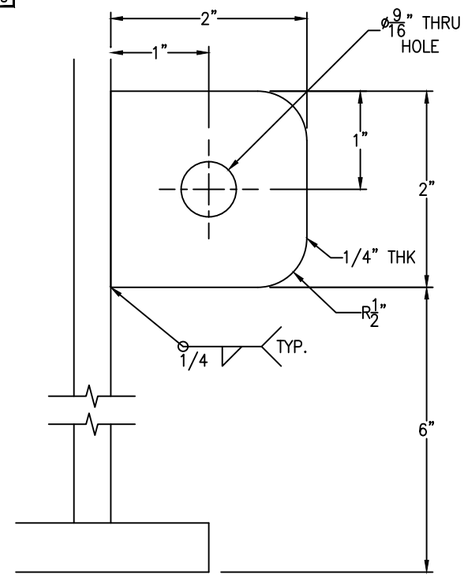

GROUND LUG IS LOCATED @ 30° △2

GROUND LUG DETAIL

SCALE: 1'-0" = 1'-0"

NOTCH PIPE

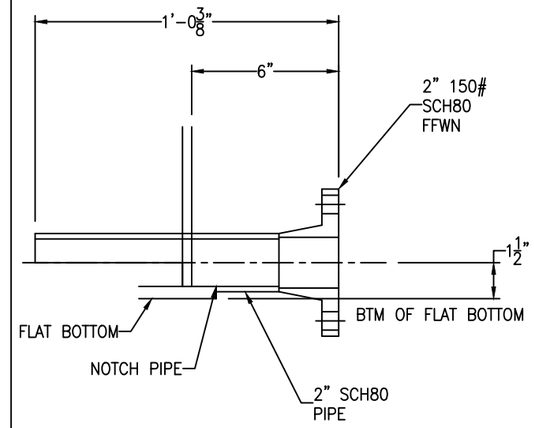

△2 NOZ. J DETAIL

SCALE: 3" = 1'-0"

FC-38

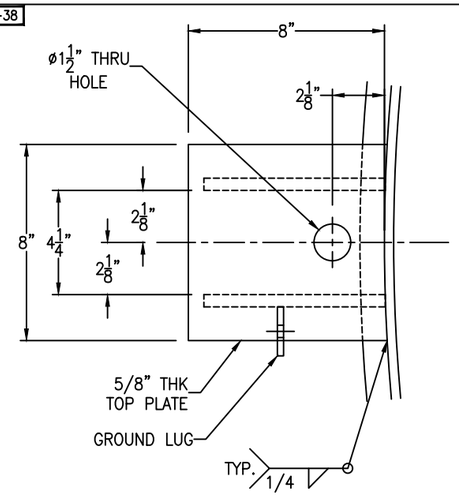

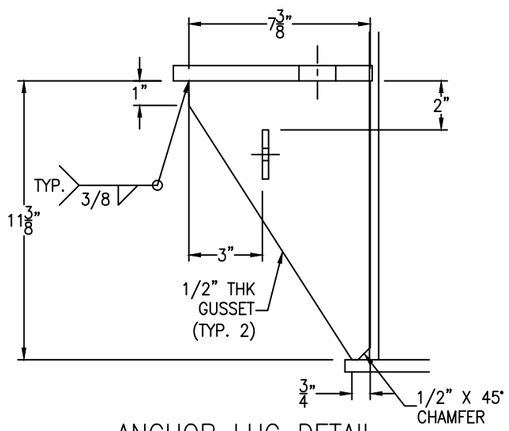

ANCHOR LUG DETAIL

(4 REQ'D) SCALE: 3" = 1'-0"

FC-38

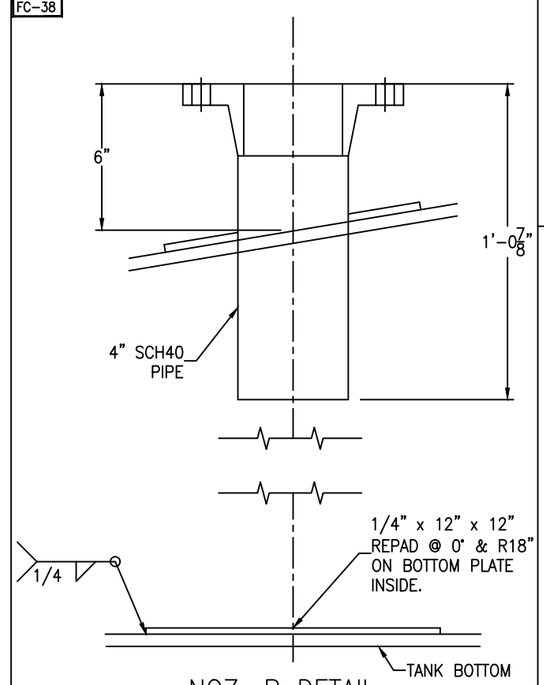

NOZ. B DETAIL

SCALE: 3" = 1'-0"

FC-38

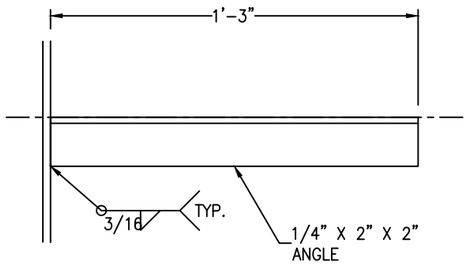

OVERFLOW CLIP DETAIL

SCALE: 3" = 1'-0"

SEE SHEET #1 FOR WELD SIZES.

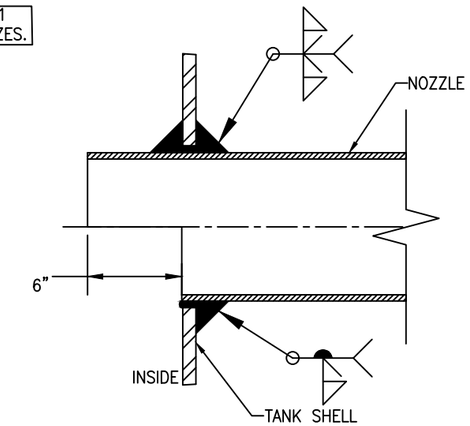

VISOR W/O REPAD DETAIL

SCALE: NOT TO SCALE

SEE SHEET #1 FOR WELD SIZES.

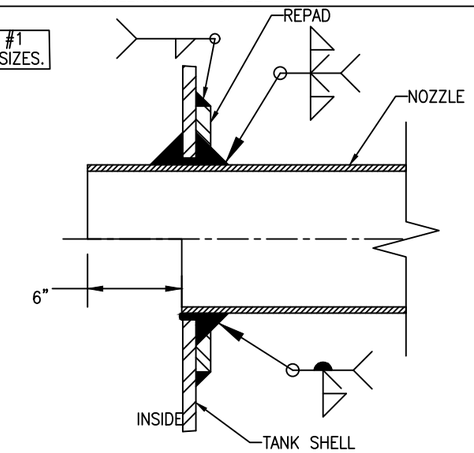

VISOR W/ REPAD DETAIL

SCALE: 3" = 1'-0"

Bolting for blinds
D: (8) 5/8"-11 NC x 3" HH BOLT
(8) 5/8"-11 NC HH NUT
(1) 4" 150# RING GASKET X 1/8" THK
K: (4) 5/8"-11 NC x 3" HH BOLT
(4) 5/8"-11 NC HH NUT
(1) 3" 150# RING GASKET X 1/8" THK

REV	D.BY	C.BY	DATE	DESCRIPTION
				AS BUILT
2	RS	AD	8/14/25	CERTIFIED
1	RS	NP	7/28/25	APPROVAL REV 1
0	AD	RS	7/8/25	APPROVAL

△1 REVISIONS

Savannah Tank & Equipment Corp.
1517 Telfair Road, Savannah, GA 31415
(912) 233-8902

DRAWN BY: AD
CHK'D BY: RS
APPROVED BY: NP
SCALE: 1/4" = 1'-0"

KEMIRA WATER SOLUTIONS INC.
SULFURIC ACID TANK
EQUIP. #
CUST. PO #4503358554

DRAWING NO.: 075-25-2 △2 SHT 2 OF 4 | REV. SET 2

FC-14

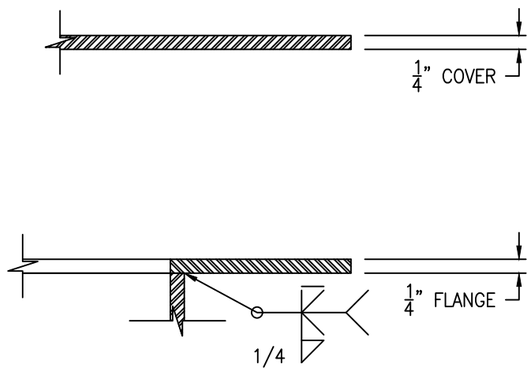

FLANGE/COVER DETAIL

(1 REQ'D) SCALE: 6" = 1'-0"

FC-14

MANWAY AND MANWAY PARTS ARE MADE OF SS304

Bolting for blind
(20) 5/8-11 NC x 1 1/2" HH BOLT
(20) 5/8-11 NC HH NUT
(1) 30" OD x 24" ID x 1/8" GASKET
W/ (20) 3/4" DIA. THRU HOLES EQUALLY SPACED ON 27 1/2" BC

Bolting for hinge
(2) 3/4-10 NC x 2 1/2" HH BOLT
(4) 3/4-10 NC HH NUT

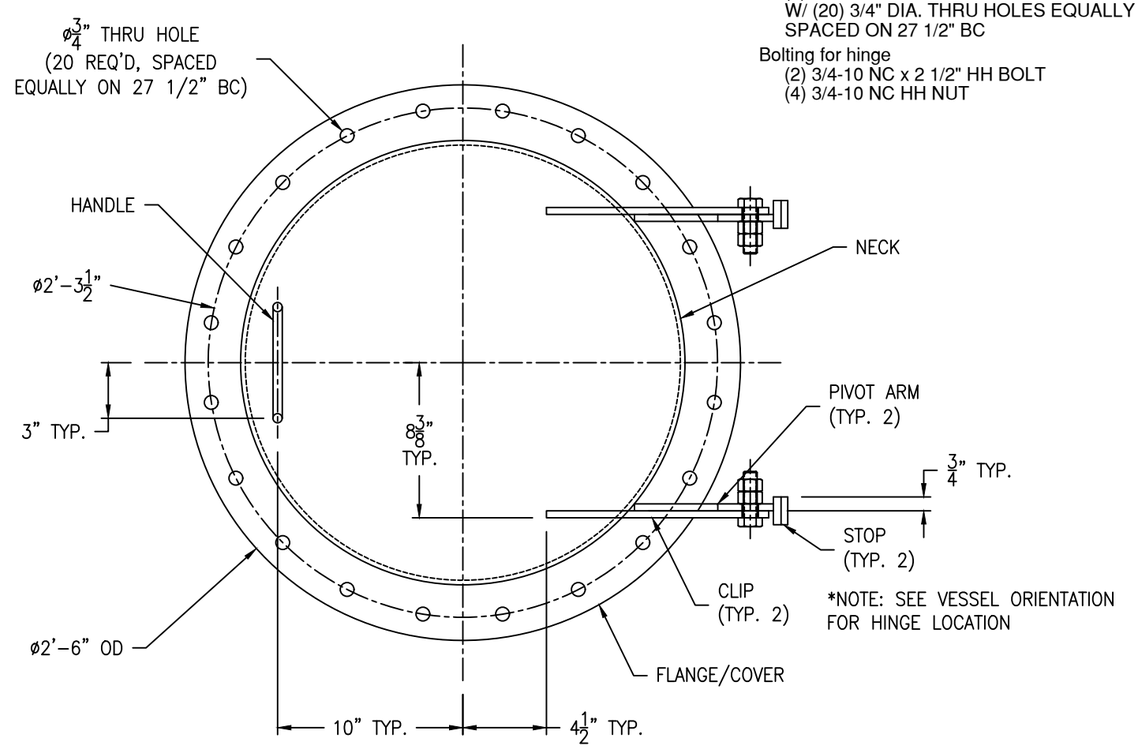

*NOTE: SEE VESSEL ORIENTATION FOR HINGE LOCATION

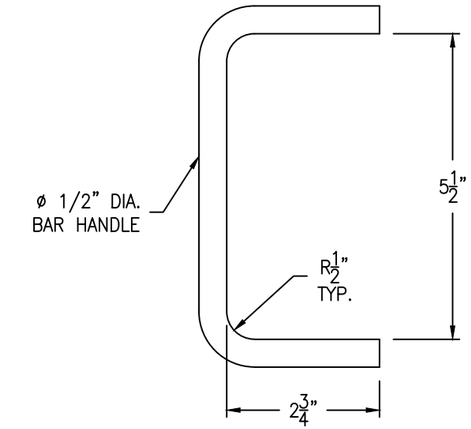

HANDLE DETAIL

(1 REQ'D) SCALE: 6" = 1'-0"

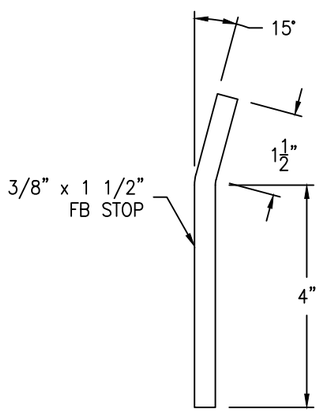

STOP DETAIL

(2 REQ'D) SCALE: 6" = 1'-0"

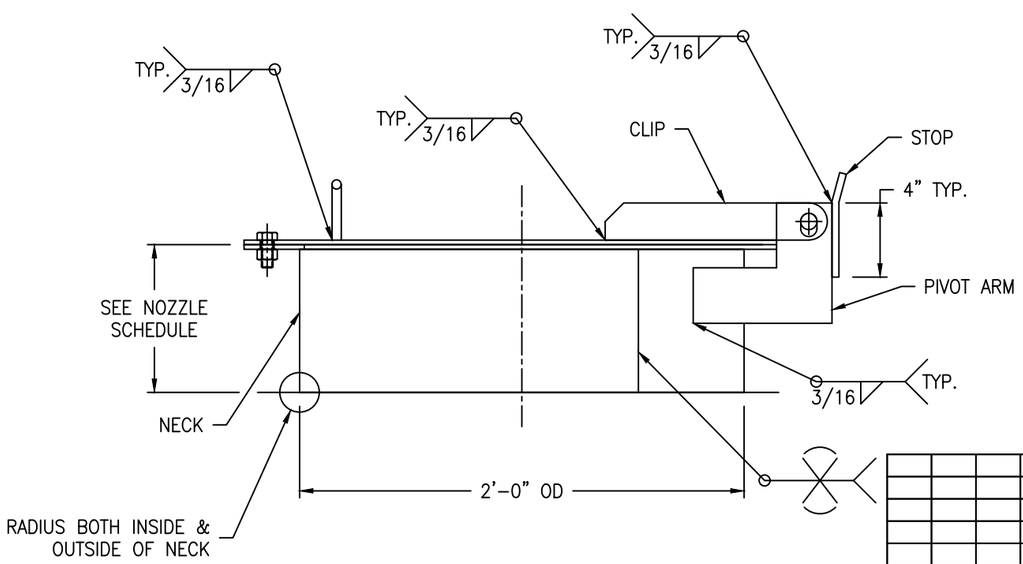

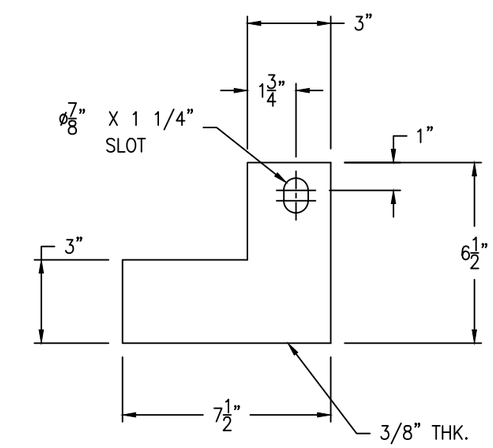

PIVOT ARM DETAIL

(2 REQ'D) SCALE: 3" = 1'-0"

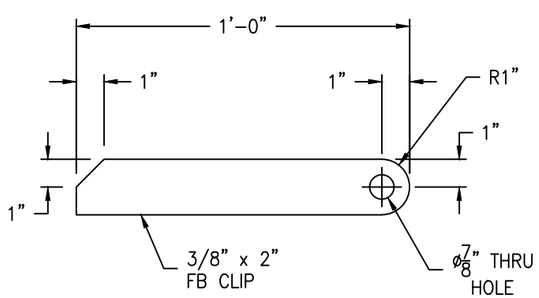

CLIP DETAIL

(2 REQ'D) SCALE: 3" = 1'-0"

REV	D.BY	C.BY	DATE	DESCRIPTION
				AS BUILT
2	RS	AD	8/14/25	CERTIFIED
1	RS	NP	7/28/25	APPROVAL REV 1
0	AD	RS	7/8/25	APPROVAL

⚠1 REVISIONS

Savannah Tank & Equipment Corp.
1517 Telfair Road, Savannah, GA 31415
(912) 233-8902

DRAWN BY:	AD
CHK'D BY:	RS
APPROVED BY:	NP
SCALE:	2" = 1'-0"

KEMIRA WATER SOLUTIONS INC.
SULFURIC ACID TANK
EQUIP. #
CUST. PO #4503358554

DRAWING NO.: 075-25-3 SHT 3 OF 4 REV. SET 2

FC-14

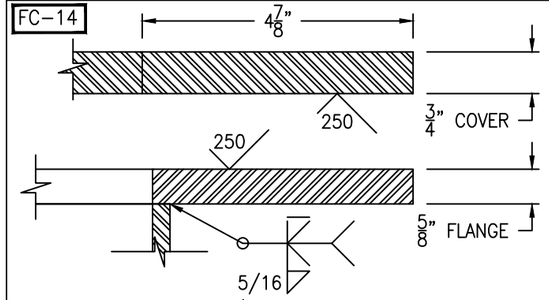

FLANGE/COVER DETAIL

(1 REQ'D) SCALE: 6" = 1'-0"

FC-14

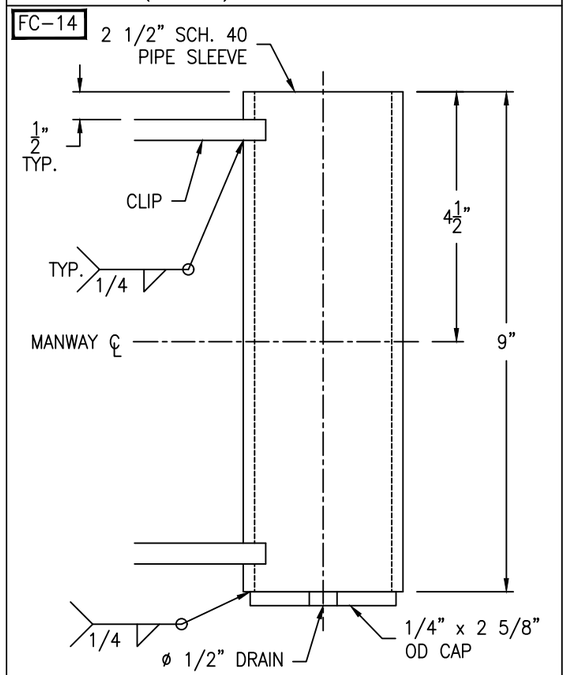

SLEEVE DETAIL

(1 REQ'D) SCALE: 6" = 1'-0"

FC-14

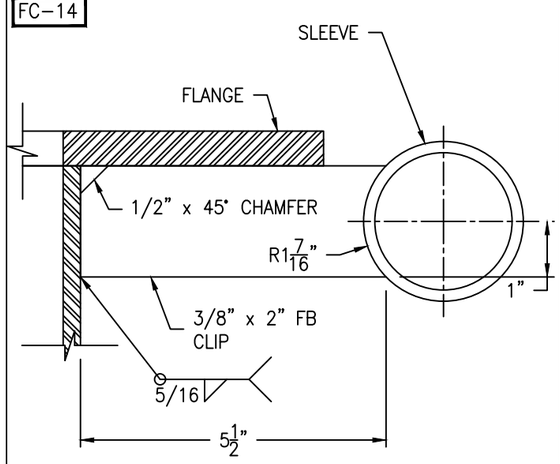

CLIP DETAIL

(2 REQ'D) SCALE: 6" = 1'-0"

FC-14

MANWAY AND MANWAY PARTS ARE MADE OF SS304

Bolting for blind
(42) 3/4-10 NC x 3" HH BOLT
(42) 3/4-10 NC HH NUT
(1) 35 3/8" OD x 30" ID x 1/8" GASKET

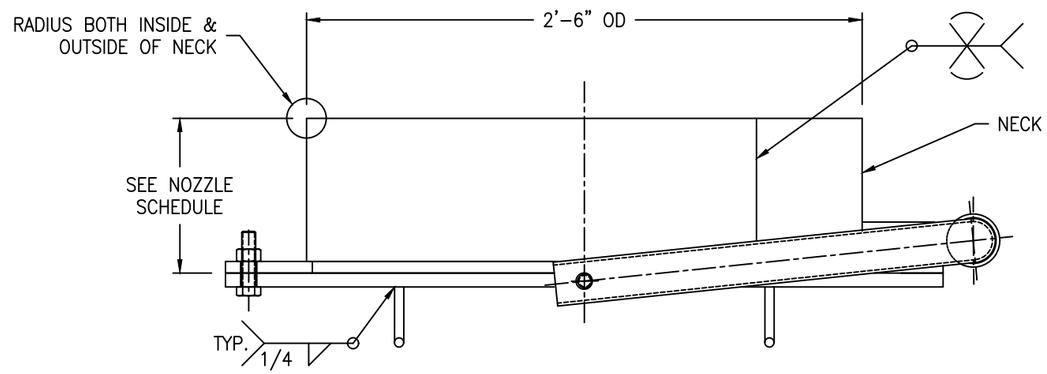

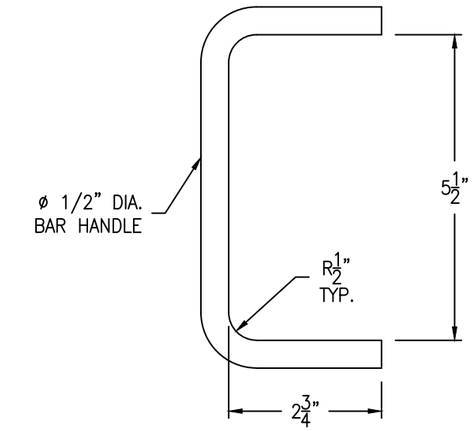

HANDLE DETAIL

(2 REQ'D) SCALE: 6" = 1'-0"

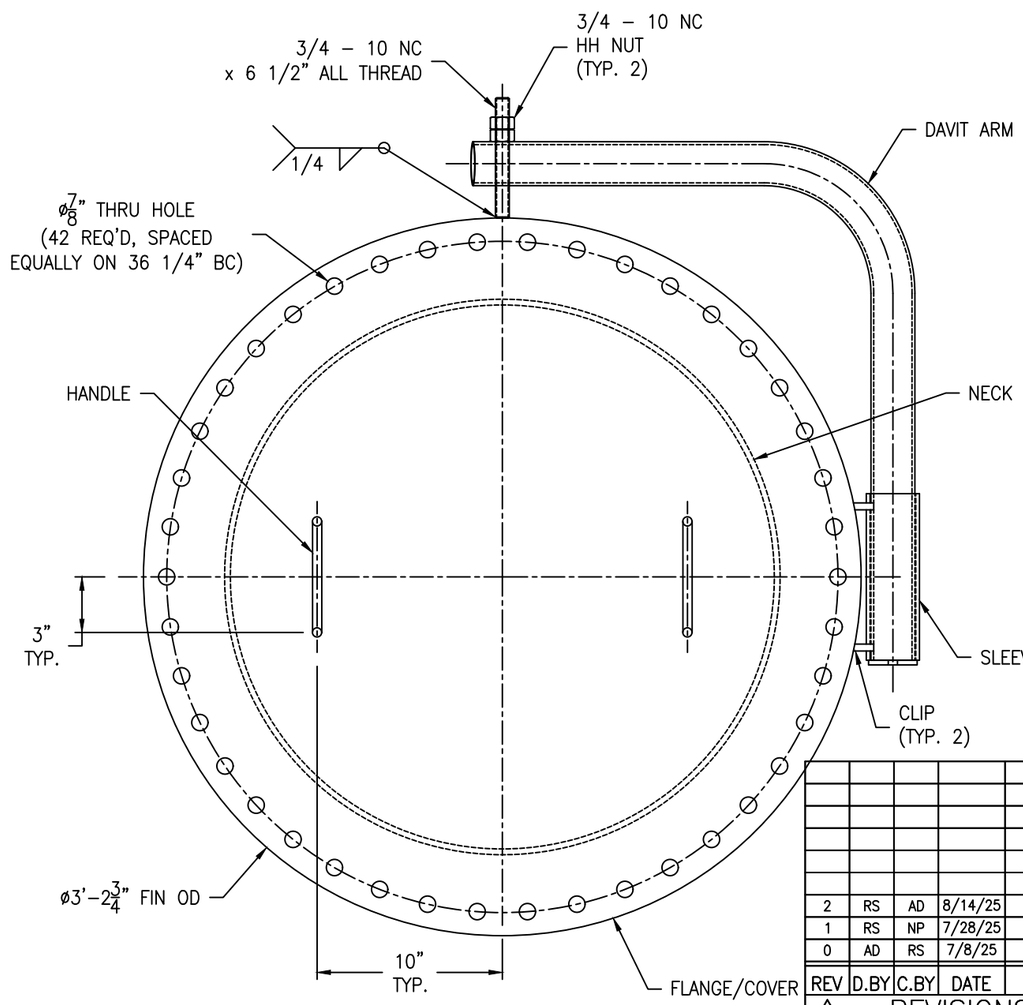

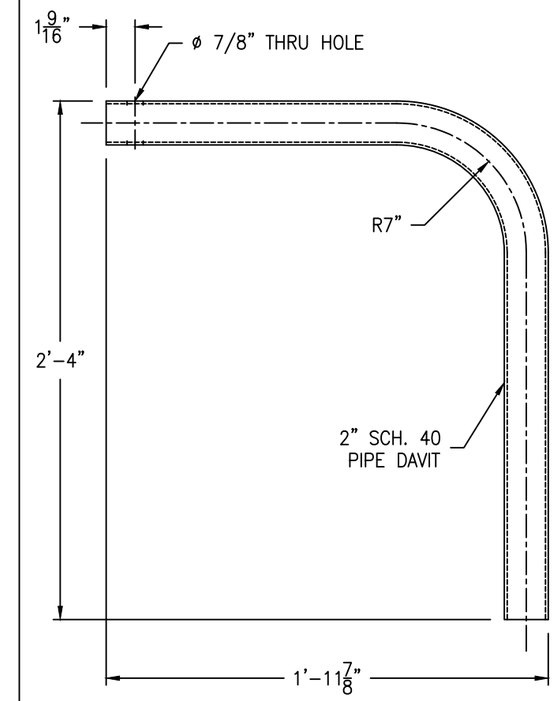

DAVIT ARM DETAIL

(1 REQ'D) SCALE: 2" = 1'-0"

REV	D.BY	C.BY	DATE	DESCRIPTION
				AS BUILT
2	RS	AD	8/14/25	CERTIFIED
1	RS	NP	7/28/25	APPROVAL REV 1
0	AD	RS	7/8/25	APPROVAL

1 REVISIONS

Savannah Tank & Equipment Corp.
1517 Telfair Road, Savannah, GA 31415
(912) 233-8902

DRAWN BY: AD
CHK'D BY: RS
APPROVED BY: NP
SCALE: 2" = 1'-0"

KEMIRA WATER SOLUTIONS INC.
SULFURIC ACID TANK
EQUIP. #
CUST. PO #4503358554

DRAWING NO.: 075-25-4 SHT 4 OF 4 REV. SET 2